ISSN 2395-1621

Modeling of 17-DOF Tractor Semi-Trailer Vehicle

[#] S. B. Walhekar, [#2]D. H. Burande

[1]sumitwalhekar@gmail.com

[2]dhburande.scoe@sinhgad.edu

[#12]Mechanical Engineering Department, S.P. Pune University
Sinhgad College of Engineering, Pune, India

ABSTRACT

The ride comfort problems mainly arise from vibration of the vehicle body which are induced by variety of sources. It includes surface irregularities ranging from potholes to random variation of the surface elevation profile. The analysis of vehicle ride behaviour is done to provide guiding principles for the control of the vibration of the vehicle. The seventeen degrees of freedom (DOF) model of tractor semi-trailer is considered. The features of the model include suspension characteristic for axles, tires, tractor cab, driver seat, fifth wheel suspension. The simulation of the model is done using MATLAB. The input in the form of road power spectral density (PSD) i.e. functions of vertical road irregularities are applied to the MATLAB model. The output vertical acceleration at trailer CG and at CG of two components in the form of root mean square (RMS) acceleration is plotted against frequency. Model is analyzed to see effects of suspension system parameter values over the ride comfort.

ARTICLE INFO

Article History

Received :18th November 2015

Received in revised form :

19th November 2015

Accepted : 21st November , 2015

Published online :

22nd November 2015

Keywords— **17-DOF Dynamic Ride Model, Tractor Semi-Trailer, Road PSD, MATLAB.**

I. INTRODUCTION

A vehicle represents a complex vibration system with many degrees of freedom. Using a linear vehicle model with certain degrees of freedom can obtain a qualitative insight into the functions of suspension, particularly the effects of the sprung and unsprung mass, spring stiffness and damping on vehicle vibration. The study of ride quality evaluates the response to road irregularities with objective of improving comfort and road isolation while maintaining wheel/ground contact.

A commercial truck has several sophisticated suspension systems aimed at providing smooth driving and comfort and protecting the machinery and the goods or equipment transported. Focus is the development and simulation of a ride comfort model for a cab-over style tractor semi-trailer and parameter variation program that can provide with best set of parameters.

T. Sun et al [1] analysed the quarter vehicle mathematical model to describe the dynamics of vehicle on the road. Linear vehicle model with two degree of freedom (DOF) obtained qualitative insight into the functions of the suspension, particularly the effects of the sprung mass and unsprung mass, spring stiffness and damping on vehicle vibrations. T. Sun et al [2] stated that ride isolation properties can be investigated using quarter vehicle model but the input from road roughness would excite not only bounce motion, but also pitch motions. The 4 DOF vehicle ride model used to investigate the effect on the ride quality of the dynamic index pitch, mass ratio, weight distribution and flat ride tuning.

C. Trangsrud [3] analysed vertical dynamics of 14 DOF tractor semi-trailer traversing a random road profile. The simulations was used to examine the effects on ride and pavement loading of wide base and conventional tires, suspension friction, tractor and trailer beaming and statistical variations in parameters such as tire pressure, axle suspension stiffness. I. Ibrahim [4] implemented theoretical studies of vibration analysis related to heavy goods vehicle

where structure flexibility of the vehicle frame was considered. The impact of the dynamic interaction between the tractor and semi-trailer of an articulated vehicle on its ride behaviour was investigated for different loading conditions.

C. Spivey [5] developed the parameter variation technique for calculating the set of vehicle parameters that will result in best ride comfort for the driver. 15 DOF tractor semi-trailer dynamic ride model was developed. The beaming effect of the tractor and trailer frame was also taken into consideration which was simulated using MATLAB. The constraints caused by the factors such as axle load limits, vehicle ride height, and stroke across the fifth wheel were considered.

The analysed model has 17 degrees of freedom (DOF) and focuses on the vertical dynamic response. Among the outputs given by the program are the root mean square (RMS) accelerations present at the driver's seat and the trailer CG.

II. MATHEMATICAL MODEL

The main function of a suspension is to limit the influence of noisy environment to the suspended masses i.e. to limit the transmissibility. However, the suspension also influences the handling and suspension level. Commercial vehicles are optimized to minimize the cost per transported kilogram. At present the ISO 2631-1(1997) standard is used to predict driver discomfort in vehicles. The standard is based on the RMS value of the frequency weighted accelerations.

The tractor semi-trailer is a cab-over style tractor with a box semi-trailer and is modelled having a 17 degree of freedom system, with ten DOFs for the tractor and seven DOFs for the semi-trailer. The model is based on work by Spivey with the addition of components mounting suspension system arrangement over trailer frame.

The degrees of freedom describing the tractor are the driver seat heave, cab pitch and heave, engine heave, tractor frame pitch and heave, tractor frame beaming and heave of each of three axles; one steer axle and two drive axles.

The DOFs for the trailer are the pitch and heave of the trailer frame, the beaming of the trailer frame, and heave of each of the two trailer axles. Also two DOF are considered for heave each of the two components. Fig.1 shows the all DOF considered in the analysis. The governing equations are obtained using the Lagrangian approach which uses the kinetic and potential energies of each of the tractor semi-trailer elements.

To analyse the dynamic response of the tractor semi-trailer a mathematical model has been developed containing 17 degree of freedom. All of the displacements are absolute quantities with the exception of the tractor and trailer frame beaming displacement, which are relative to the rigid frames.

A. Modeling of suspended masses

The tractor semi-trailer model consists of suspended masses which are coupled by parallel liner spring and viscous dampers. The inputs are transmitted from the road to the vehicle via the tires, which are represented as equivalent linear spring and viscous damping suspensions which approximate the tire stiffness and damping characteristics.

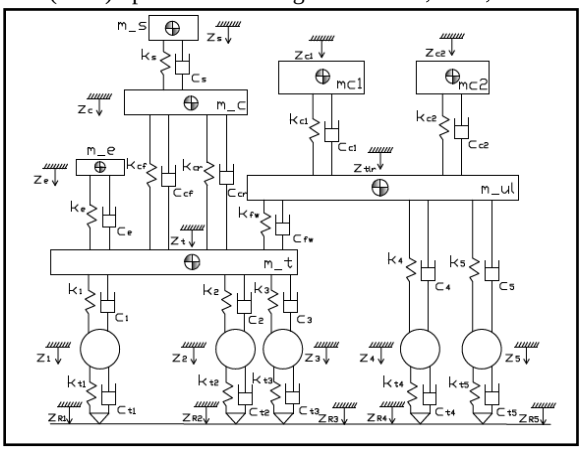

Fig.1 Seventeen degree of freedom tractor semi-trailer model

The tires are connected to the frame by another equivalent liner spring and damper which approximate the vehicle axle suspension elements. The semi-trailer is connected to the tractor frame via a fifth wheel connection, modelled by equivalent linear spring and damper.

The engine is modelled as a lumped mass connected to the tractor frame via another linear spring mass and viscous damper which approximates engine mounts. The cab sits on two sets of linear spring and viscous dampers. The driver seat has been modelled with equivalent linear spring and viscous damper. The two components are mounted over trailer frame using spring and damper suspension system.

B. Modeling of suspension elements

All of the suspension elements found in the model are represented as combinations of linear springs and viscous damping elements. These are meant to provide an approximation to suspension elements on an actual tractor semi-trailer. The road inputs are assumed to be identical on the left and right sides of vehicle the vehicle. Also, the suspension elements may be lumped into a single per-axle suspension element representative of left and right sides of the axle.

C. Tire Modeling

The tires for this tractor semi-trailer are modelled as point masses connected to the road by equivalent linear spring and viscous damping elements. The tire spring constant represents the equivalent tire stiffness and the damping constant simulates the energy dissipation results from tire deformation. The tire and wheel mass is lumped together with the axle mass and treated as a single mass at the center of the axle.

D. Tractor and Trailer Frame

The tractor and trailer frames are constructed using simple ladder designs with two longitudinal frame rails on the outside and parallel frame rail between them. This design allows the frames to become excited and flex in bending in response to the road inputs.

When the fifth wheel connection is modelled as a pin connection, the tractor and trailer frame are modelled as free-pinned and pinned-free beams respectively. However, when a fifth wheel suspension is present, each frame is modelled as a free-free beam. The equation for bending vibration of a uniform Euler-Bernoulli beam is

$$EI\frac{\partial^4\eta}{\partial x^4}(x,t) + \rho A\frac{\partial^2\eta}{\partial t^2}(x,t) = f(x,$$
(1)

Where E is the modulus of elasticity, I is the moment of inertia, η(x,t) is the vertical displacement of the beam at some point x along the beam and at some time t, ρ is the density of the beam material, and A is the cross sectional area of the beam.

E. Road Profile

The road which provides the vehicle model inputs is a random road profile. For the purpose of this analysis, the road profiles are given in terms of their power spectral density functions,

$$S_{Z_R}(\Omega) = C_{sp}\Omega^{-} \quad (2)$$

Where Ω is the spatial frequency measured in cycle per unit length, C_{sp} and N are constants found in Table I and S_{Z_R} is the power spectral density (PSD) function of the elevation of the road surface profile. The PSD of the road profile can be converted to a function of temporal frequency, f measured in Hz, by using the velocity of the vehicle in units of length per second.

TABLE I

VALUES OF AND N FOR PSDS OF VARIOUS ROAD SURFACES

Sr. No.	Description	C_{sp} (SI)	N
1	**Smooth Runway**	4.3×10^{-11}	**3.8**
2	**Rough Runway**	8.1×10^{-6}	**2.1**
3	**Smooth Highway**	4.8×10^{-7}	**2.1**
4	**Highway with Gravel**	4.4×10^{-6}	**2.1**
5	**Pasture**	3×10^{-4}	**1.6**
6	**Plowed Field**	6.5×10^{-4}	**1.6**

III. SIMULATION OF MODEL

A MATLAB simulation is created to investigate the effects of various parameters have on the driver ride comfort, vehicle ride height and pavement loading. The vehicle is described by the seventeen second-order differential equations. The equations are arranged in matrix form,

$$M\ddot{X} + C\dot{X} + KX = A\dot{U} + B \quad (3)$$

Where M is the mass matrix, C is the damping matrix, K is the stiffness matrix, A is the road input damping matrix and B is the road input stiffness matrix. The matrix X is the vector of the system unknowns,

$$X^T = [z_S\ z_C\ \theta_C\ z_E\ z_T\ \theta_T\ q_T\ z_{Tlr}\ \theta_{Tlr}\ q_{Tlr}\ z_1\ z_2\ z_3\ z_4\ z_5\ z_{C1}\ z_{C2}]$$
(4)

The matrix U is vector of the road profile vertical displacement,

$$U^T = [z_{R1}\ z_{R2}\ z_{R3}\ z_{R4}\ z_{R5}] \quad (5)$$

To calculate the frequency responses, PSDs, RMS values and eigenvalues and eigenvectors, the Laplace transform of the system must be taken,

$$\{Ms^2 + Cs + K\}X(s) = \{As + B\}U(s) \quad (6)$$

The values for the road input in the U vector depend on the user defined road profile. The road profile is an approximation to the vertical irregularities found on different types of roadways. Each axle is assumed to see the same road profile, but with time delay between the axles. All time delays are calculated relative to the first (steer) axle of the tractor.

Applying the time delays to the road input vector, U, the new road input vector in Laplace form becomes,

$$U(s) = [1\ e^{-sT2}\ e^{-sT3}\ e^{-sT4}\ e^{-sT5}]z_1(s) = b(s)\,z_1(s)$$
(7)

System with only one input due to surface irregularities becomes,

$$\{Ms^2 + Cs + K\}X(s) = \{As + B\}b(s)\,z_1(s) \quad (8)$$

A. Calculation of Frequency Response

The road input into the system affect the dynamic response of each of the individual degrees of freedom. To analyse how the system reacts to various inputs, it is analysed over an entire spectrum of frequencies ranging from 0.1 to 50 Hz. Solving for the vector of the system's unknown X(s) from Equation (8) yields,

$$X(s) = (Ms^2 + Cs + K)^{-1}[\{As + B\}b(s)\,z_1(s)]$$
(9)

B. Calculation of PSDs and RMS

To convert the road PSD into a form that can be used to calculate the PSDs for the responses of the other degree of freedom, it has to be manipulated in terms of the temporal frequency, ω in units of rad/sec,

$$S_{Z_1}(\omega) = \frac{1}{2\pi V}S_{a_1}(\Omega) = \frac{(2\pi V)^{N-1}}{\omega^N}C \quad (10)$$

Where, V is the velocity of the vehicle. Using the input PSD from roadway, the PSDs for the other individual degrees of freedom of the system can be calculated using the equation given below,

$$S(\omega) = |H_{z_1}(j\omega)|^2 S_{z_1}(\omega) \quad (11)$$

Where, $|H_{z_1}(j\omega$ is the magnitude of the individual transfer function of interest relative to the road displacement under the first (steer) axle of tractor.

As specified in ISO 2631, the RMS vertical and longitudinal accelerations are calculated over a series of one-third octave bands with specified center frequencies. The lower and upper frequencies of each band, and are related to center frequency, by the equation,

$$f_1 = 0.89 \quad \text{and} \quad f_2 = 1.26\,f_1 = 1.12$$
(12)

The mean square value of a particular acceleration is equal to the area under the PSD curve for that particular acceleration. In each one third octave band, this area is approximated by

$$\Delta E(\ddot{z}^2) = \frac{S(\omega_2)+S(\omega_c)}{2}(\omega_2 - \omega_c) + \frac{S(\omega_c)+S(\omega_1)}{2}(\omega_c - \omega_1)$$
(13)

To calculate the total mean square over the entire frequency range of interest, this includes all the center frequencies, all of the mean squares in the one third octave band are summed. The RMS over entire frequency range is then the square root value of this value,

$$RMS = \sqrt{\sum \Delta E(\ddot{z}^2)} \quad (14)$$

The overall weighted RMS acceleration value a_0 can be compared to the comfort ranges given in Table II.

TABLE III

WEIGHTED RMS ACCELERATION COMFORT LEVELS [ISO 2631]

Overall Weighted Acceleration (a	ISO 2631 Comfort Level
Less than 0.315 m/s^2	Not Uncomfortable
0.315 to 0.63 m/s^2	A Little Uncomfortable
0.5 to 1.0 m/s^2	Fairly Uncomfortable
0.8 to 1.6 m/s^2	Uncomfortable
1.25 to 2.5 m/s^2	Very Uncomfortable
Greater than 2.0 m/s^2	Extremely Uncomfortable

IV. SIMULATION MODEL RESULTS

A. *RMS Acceleration Plots*

For each type of standard road surface RMS accelerations plots are generated against frequency range 0.1 to 50 Hz. According to road surface, in the calculation only values of Csp and N are changed. This iteration is carried out at vehicle speed of 60kmph. Fig.1 and Fig.2 shows the RMS acceleration observed at driver seat CG location and trailer CG. It can be seen that values are very low when they are compared to values given in ISO2631.

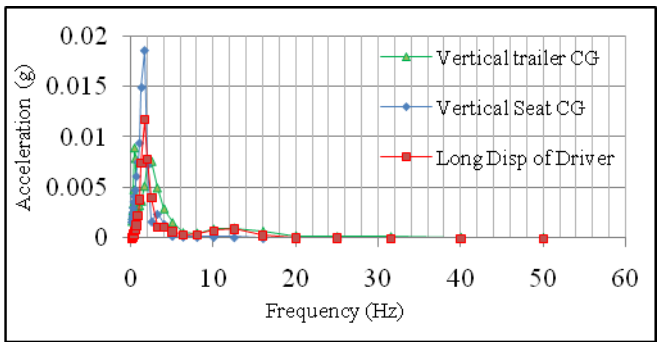

Fig.2 RMS acceleration for smooth runway

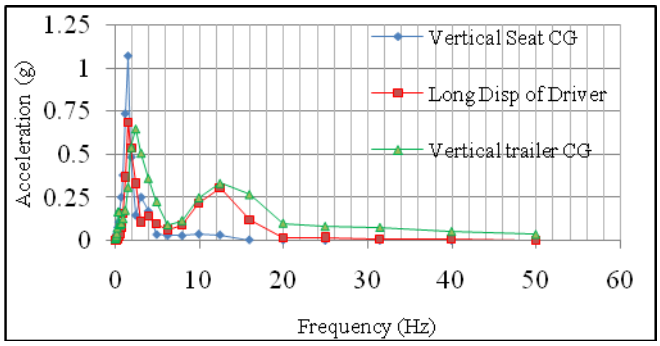

Fig.3 RMS acceleration for rough runway

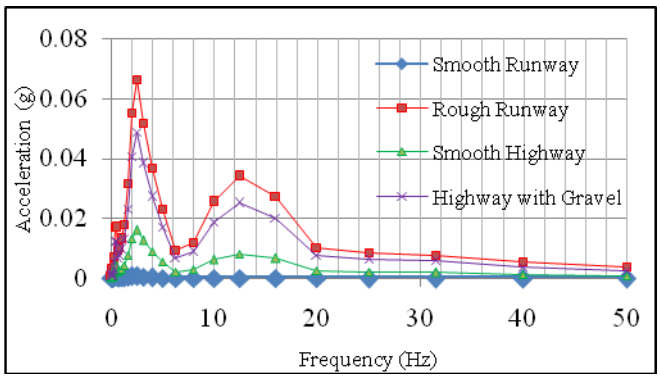

Fig.4 Trailer CG RMS acceleration for standard road surfaces

MATLAB model results shows max acceleration is observed at frequency around 3-5 Hz as seen in Fig.3 and Fig.4. This shows vehicle parameter should be selected considering this low frequency range. In MATLAB model RMS acceleration amplitude is 0.067g whereas experimentally it is 0.048g for rough runway road class. The analysis is done various classes of road i.e. Smooth Runway, Rough Runway, Smooth Highway and Highway with gravel.

TABLE IIIII
WEIGHTED RMS ACCELERATION LEVELS

Sr. No.	Road Surface	Trailer CG (g)	Comp1 CG (g)	Comp2 CG (g)
1	Smooth Runway	0.003	0.001	0.002
2	Smooth Highway	0.165	0.017	0.038
3	Highway with gravel	0.500	0.053	0.114
4	Rough Runway	0.679	0.072	0.154

In Table III, it is observed that weighted acceleration at trailer CG is well below 0.7m/s^2. According to ISO 2631, this is little uncomfortable on rough runway. On other road surface this value is below 0.5m/s^2. This will not create a problem and will be comfortable.

V. CONCLUSION

It is found that the max value of RMS acceleration is found in the frequency range of 3-5 Hz and according to ISO standards these RMS acceleration values are within limit. Once the frequency is increased above 5 Hz up to 50 Hz, acceleration level goes down which shows vehicle parameter value should be designed at low critical frequency range i.e. 3-5 Hz. The value of max amplitude at driver seat CG is 1.10g whereas max amplitude at trailer CG is 0.679g. Max amplitude are observed on rough runway road conditions at frequency around 3 Hz.

The vibration levels can be further reduced if proper isolation system is used. As seen in result, the MATLAB model can be used to change the values of suspension system parameters and see the effects of it on RMS acceleration.

ACKNOWLEDGMENT

The authors wish to acknowledge the support of The Automotive Research Association of India (ARAI), Pune. The MATLAB model was validated using practical RMS acceleration values.

REFERENCES

[1] T. Sun, Y. Zhang and P. Barak, "Quarter vehicle ride model," SAE Technical Paper, May 2002.
[2] T. Sun, Y. Zhang and P. Barak, "4-DOF vehicle ride model," SAE Technical Paper, May 2002.
[3] C. Trangsrud, E.H. Law and I. Janajreh, "Ride dynamics and pavement loading of tractor semi-trailer on randomly rough roads," SAE Technical Paper, Oct. 2004.
[4] I.M. Ibrahim, D.A. Crolla and D.C. Barton, "The impact of the dynamic tractor-semitrailer interaction on the ride behaviour of fully laden and unladen trucks," SAE Technical Paper, Oct. 2004

[5] C.R. Spivey, "Analysis of ride quality of tractor semi-trailers," Clemson University, May 2007.
[6] J.Y. Wong, Theory of ground vehicles, 3rd ed., John Wiley & Sons, Inc., 2001.
[7] T.D. Gillespie, Fundamentals of vehicle dynamics, 1st ed., Society of automotive engineers,Inc.
[8] M. Gafvert, "A 9-DOF tractor-semitrailer dynamic handling model for advanced chassis control studies," Lund Institute of Technology, Sweden, Dec. 2001.

a

